ARPANEL

PRODUCT DATA SHEET

Wall sandwich panel

ARPANEL SU PIR

- hidden fastening system



EDITION 5/2026
COPYRIGHT © 2026, ADAMIETZ S.A.

PRODUCT DATA SHEET

ARPANEL SU PIR

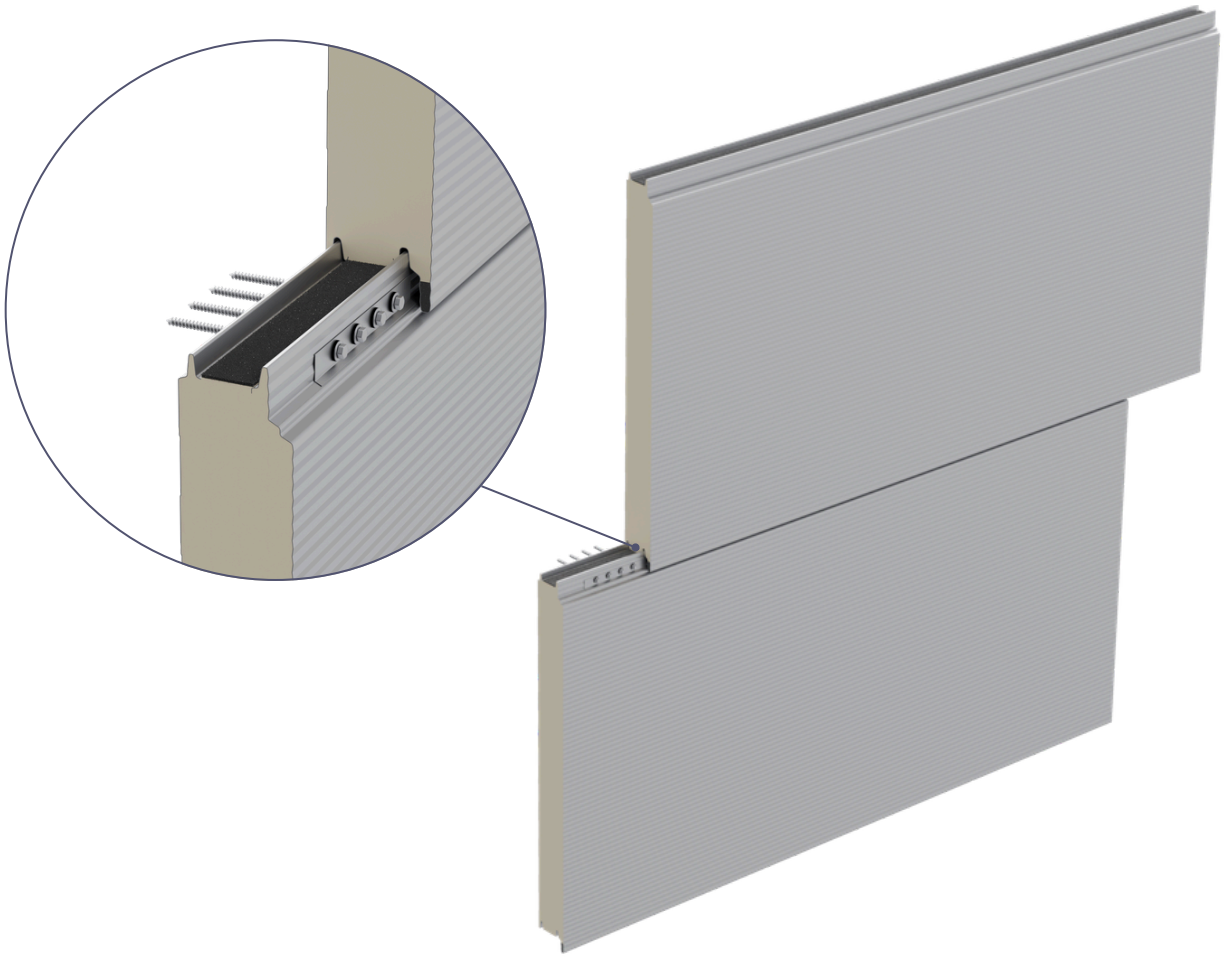

CROSS SECTION

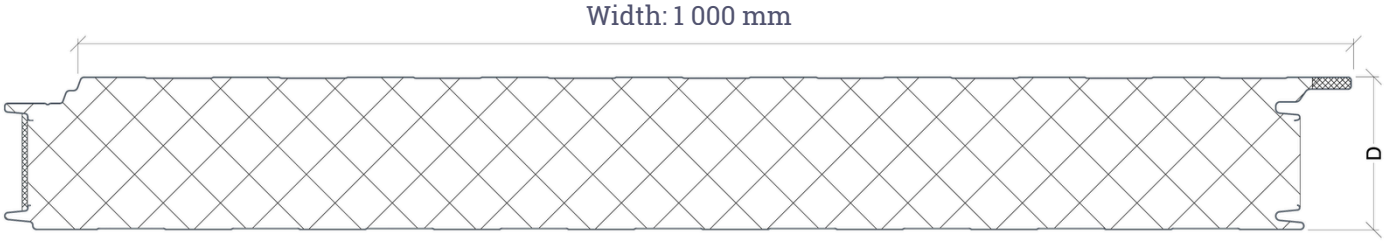

D = 60, 80, 100, 120 mm

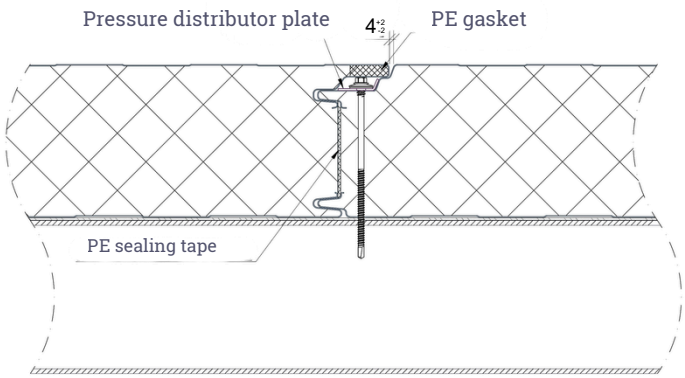

COPYRIGHT © 2026, ADAMIETZ S.A.

ARPANEL SU PIR

PARAMETERS

Core thickness [mm]	60	80	100	120
External facing thickness [mm]y	0,5 -0,7			
Internal facing thickness [mm]	0,4 -0,7			
Core density [kg/m³]	40 ± 3			
Weight [kg/ m²]	10,8	11,6	12,4	13,2
Proper acoustic insulation [Rw(C,Ctr) dB]	25 (-2,-4)			
Sound absorption [αw]	0,15			
Heat transfer coefficient Ud,S = W/(m2 x K)	0,40	0,29	0,23	0,19
Reaction to fire	B-s1,d0			
Fire spread according to PN-B-02867	NRO			

Installation details are available in the fire classifications of ARPANEL sandwich panels.

COPYRIGHT © 2026, ADAMIETZ S.A.

ARPANEL SU PIR

INTERNAL WALL				
Core thickness [mm]	60	80	100	120
Fire resistance according to EN 13501-2 vertical	not classified		E 20 / EI 15 / EW 20 ≤ 7,5 m E 30 / EI 20 / EW 30 ≤ 4 m	E 20 / EI 20 / EW 20 ≤ 7,5 m E 30 / EI 30 / EW 30 ≤ 4 m
Fire resistance according to EN 13501-2 horizontal	not classified		E 20 / EI 15 / EW 20 ≤ 7,5 m E 20 / EI 20 / EW 20 ≤ 4 m E 30 / EI 20 / EW 30 ≤ 3 m	

EXTERNAL WALL				
Core thickness [mm]	60	80	100	120
Fire resistance according to EN 13501-2 vertical	not classified		E 20 (i→o) / EI 15 (i→o) / EW 20 (i→o) ≤ 7,5 m E 30 (i→o) / EI 20 (i→o) / EW 30 (i→o) ≤ 4 m	E 20 (i→o) / EI 20 (i→o) / EW 20 (i→o) ≤ 7,5 m E 30 (i→o) / EI 30 (i→o) / EW 30 (i→o) ≤ 4 m
Fire resistance according to EN 13501-2 horizontal	not classified		E 20 (i→o) / EI 15 (i→o) / EW 20 (i→o) ≤ 7,5 m E 20 (i→o) / EI 20 (i→o) / EW 20 (i→o) ≤ 4 m E 30 (i→o) / EI 15 (i→o) / EW 30 (i→o) ≤ 3 m	

COPYRIGHT © 2026, ADAMIETZ S.A.

ARPANEL SU PIR

PROFILES

Name	external	internal	cross-section
Micro 8	✓	✗	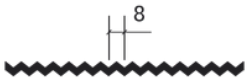
Micro 14	✓	✗	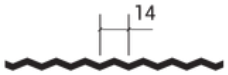
Linear	✓	✓	
Smooth	✓	✓	
Micro 20	✗	✓	
Micro 30	✓	✗	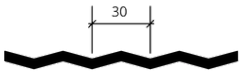

TYPES OF STANDARD COATINGS

Polyester – PE
*Other types of coatings, e.g. PVDF, PUR PA, HDX, PRISMA, FOODSAFE, HPS, SDP, are available upon request.

ENVIRONMENT IN CASE OF A STANDARD COATING, POLYESTER – PE

A possibility to apply inside, in environments A1, A2, A3 and outside buildings C1, C2, C3.
*For environments characterized by higher aggressiveness, a coating that meets the requirements of a given corrosivity category should be selected.

COPYRIGHT © 2026, ADAMIETZ S.A.

ARPANEL SU PIR

STANDARD COLORS



AVAILABLE LENGTHS OF PANELS

Standard lengths of panels are from 2,0 m to 18,5 m.

PERMISSIBLE DEVIATIONS FROM DIMENSIONS

According to EN 14509:
Panels with length of ≤ 3 m ±5 mm
Panels with length of > 3 m ±10 mm
For the covering width of the sandwich panel, ±2 mm
At the panel thickness:
For D ≤ 100 mm ±2 mm
For D > 100 mm ±2 %
Rectangularity of cut at the length ≤ 0,6 % of the panel width
Panel:
2 mm per each meter of length, but not more than 20 mm
8,5 mm per each meter of width, but not more than 10 mm

This product data sheet, including the descriptions, technical data, specifications and drawings, is for information purposes only and constitutes marketing material.
The product data sheet does not constitute an offer within the meaning of the Civil Code.
The manufacturer reserves the right to change the technical specifications, design, configuration, appearance and functionality of its products, as well as to introduce new products and withdraw products from the product data sheet, without being required to update the published material in advance.
The presented information does not constitute a basis for determining the final specifications and properties of the products. The binding technical specifications, terms of performance, scope of delivery and warranty terms are set out in the individual contract (order).
In the event of discrepancies between the information contained in this product data sheet and the contract (order), the terms of the contract (order) shall be binding.
All copyright to this product data sheet and its individual elements is held by Adamietz S.A., the manufacturer of ARPANEL sandwich panels. Copying, reproducing, publishing, licensing, using for commercial purposes or marketing all or part of this publication without the prior written consent of Adamietz S.A. is prohibited, subject to cases permitted by the applicable law.
Any infringement of the rights relating to these materials may result in Adamietz S.A. pursuing claims as provided for by law, including claims arising from copyright infringement and acts of unfair competition.