ARPANEL

PRODUCT DATA SHEET

Wall sandwich panel

ARPANEL S MiWo Lt

- standard fastening system



EDITION 5/2026
COPYRIGHT © 2026, ADAMIETZ S.A.

ARPANEL S MiWo Lt

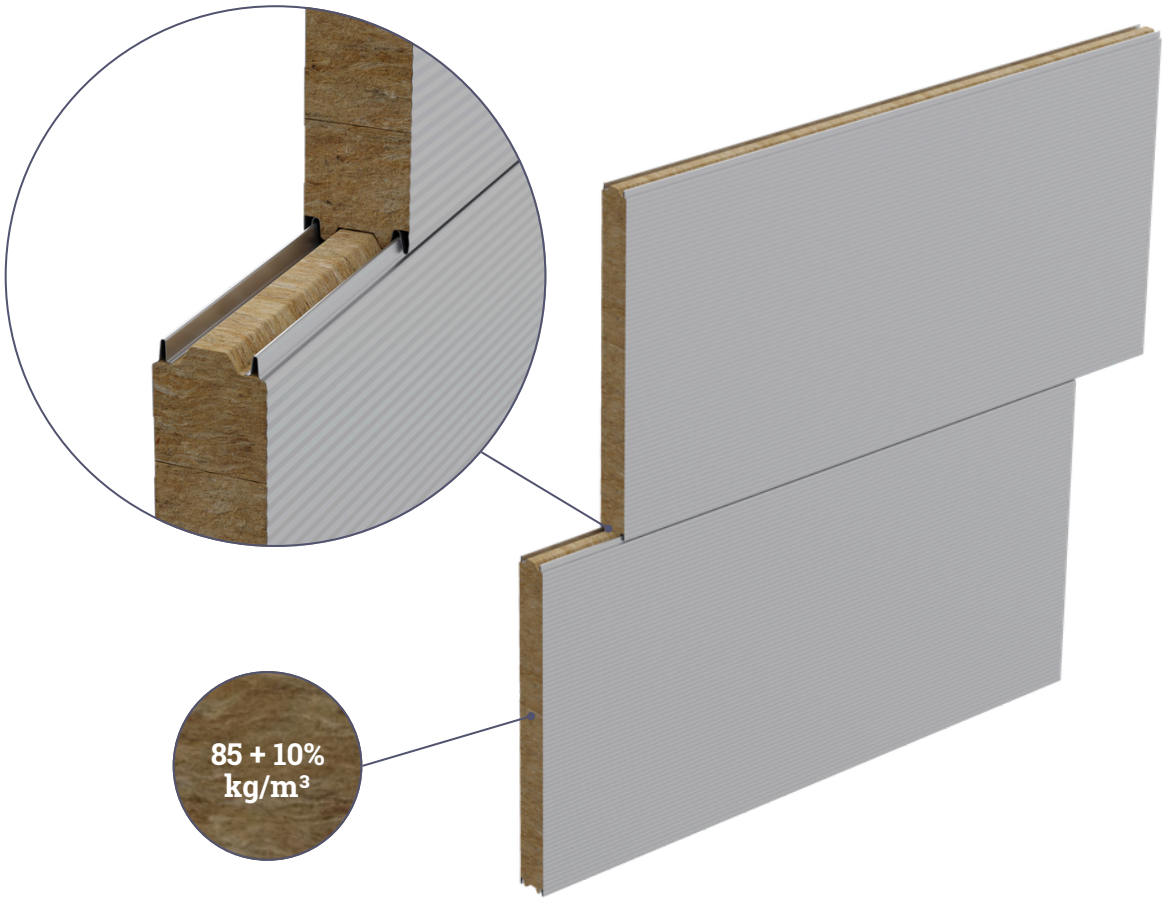

CROSS SECTION

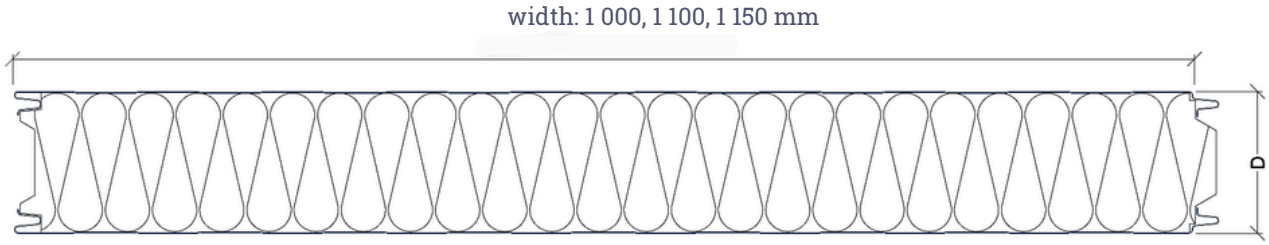

D = 80*, 100, 120, 150, 160*, 180*, 200 mm

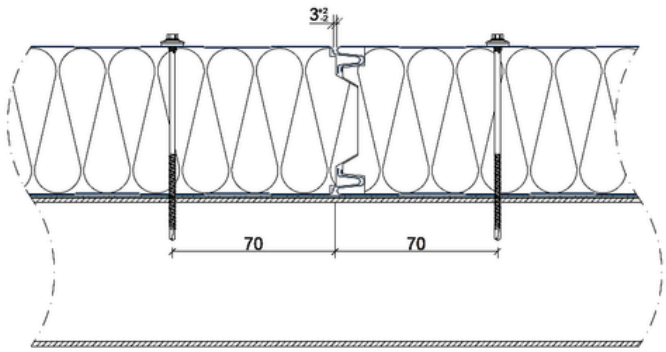

*The 80 m, 160 mm and 180 mm thickness are produced on special order after consultation with the manufacturer.

COPYRIGHT © 2026, ADAMIETZ S.A.

ARPANEL S MiWo Lt

PARAMETERS

Core thickness [mm]	80	100	120	150	160	180	200
External facing thickness [mm]	0,5 -0,7						
Internal facing thickness [mm]	0,5 -0,7						
Core density [kg/m³]	85 + 10%						
Weight [kg/ m²]	16,1	17,8	19,5	22	22,9	24,6	26,3
Proper acoustic insulation Rw(C,Ctr) [dB]	30 (-2,-3)						31 (-3,-4)
Sound absorption [αw]	0,15						
Heat transfer coefficient Ud,S = W/(m2 x K)	0,46	0,37	0,31	0,25	0,23	0,21	0,19
Reaction to fire	A2-s1,d0						
Fire spread according to PN-B-02867	NRO						

Installation details are available in the fire classifications of ARPANEL sandwich panels.

COPYRIGHT © 2026, ADAMIETZ S.A.

ARPANEL S MiWo Lt

INTERNAL WALL							
Core thickness [mm]	80	100	120	150	160	180	200
Fire resistance according to EN 13501-2 vertical	NPD						
Fire resistance according to EN 13501-2 horizontal	NPD		E 30/ EI 30/ EW 30 ≤ 7,5m E 45/ EI 30/ EW 45 ≤ 6m E 45/ EI 45/ EW 45 ≤ 4m				E 120/ EI 90/ EW 120 ≤ 7,5m E 180/ EI 120/ EW 180 ≤ 4m

EXTERNAL WALL							
Core thickness [mm]	80	100	120	150	160	180	200
Fire resistance according to EN 13501-2 vertical	NPD						
Fire resistance according to EN 13501-2 horizontal	NPD		E 30 (o↔i)/ EI 30 (o↔i) / EW 30 (o↔i) ≤ 7,5 m E 45 (o↔i)/ EI 30 (o↔i)/ EW 45 (o↔i) ≤ 6 m E 45 (o↔i)/ EI 45 (o↔i)/ EW 45 (o↔i) ≤ 4 m				E 120 (o↔i)/ EI 90 (o↔i)/ EW 120 (o↔i) ≤ 7,5 m E 180 (o↔i)/ EI 120 (o↔i)/ EW 180 (o↔i) ≤ 4 m

COPYRIGHT © 2026, ADAMIETZ S.A.

PRODUCT DATA SHEET

ARPANEL S MiWo Lt

INTERNAL WALL*							
Core thickness [mm]	80	100	120	150	160	180	200
Fire resistance according to EN 13501-2 vertical	NPD	E 60 / EI 45 / EW 60 ≤ 7,5 m E 60 / EI 60 / EW 60 ≤ 6 m E 90 / EI 60 / EW 90 ≤ 4 m					
Fire resistance according to EN 13501-2 horizontal	NPD	E 90/ EI 60/ EW 90 ≤ 7,5m E 120/ EI 90/ EW 120 ≤ 4m	E 90 / EI 60 / EW 90 ≤ 7,5 m E 120 / EI 90 / EW 120 ≤ 6 m E 120 / EI 120 / EW 120 ≤ 4 m	E 120 / EI 120 / EW 120 ≤ 7,5 m E 180 / EI 120 / EW 180 ≤ 4 m	E 120 / EI 120 / EW 120 ≤ 7,5 m E 180 / EI 180 / EW 180 ≤ 4 m	E 120 / EI 120 / EW 120 ≤ 7,5 m E 180 / EI 120 / EW 180 ≤ 6 m E 180 / EI 180 / EW 180 ≤ 4 m	E 120 / EI 120 / EW 120 ≤ 7,5 m E 180 / EI 180 / EW 180 ≤ 6 m E 240 / EI 240/ EW240≤ 4 m

EXTERNAL WALL*							
Core thickness [mm]	80	100	120	150	160	180	200
Fire resistance according to EN 13501-2 vertical	NPD	E 60 (o↔i) / EI 45 (o↔i) / EW 60 (o↔i) ≤ 7,5 m E 60 (o↔i) / EI 60 (o↔i) / EW 60 (o↔i) ≤ 6 m E 90 (o↔i) / EI 60 (o↔i) / EW 90 (o↔i) ≤ 4 m					
Fire resistance according to EN 13501-2 horizontal	NPD	E 90 (o↔i)/ EI 60 (o↔i)/ EW 90 (o↔i) ≤ 7,5 m E 120 (o↔i)/ EI 90 (o↔i)/ EW 120 (o↔i) ≤ 4 m	90 (o↔i)/ EI 60 (o↔i)/ EW 90 (o↔i) ≤ 7,5 m E 120 (o↔i)/ EI 90 (o↔i)/ EW 120 (o↔i) ≤ 6 m E 120 (o↔i)/ EI 120 (o↔i)/ EW 120 (o↔i) ≤ 4 m	E 120 (o↔i)/ EI 120 (o↔i)/ EW 120 (o↔i) ≤ 7,5 m E 180 (o↔i)/ EI 120 (o↔i)/ EW 180 (o↔i) ≤ 4 m	E 120 (o↔i)/ EI 120 (o↔i)/ EW 120 (o↔i) ≤ 7,5 m E 180 (o↔i)/ EI 180 (o↔i)/ EW 180 (o↔i) ≤ 4 m	E 120 (o↔i)/ EI 120 (o↔i)/ EW 120 (o↔i) ≤ 7,5 m E 180 (o↔i)/ EI 120 (o↔i)/ EW 180 (o↔i) ≤ 6 m E 180 (o↔i)/ EI 180 (o↔i) / EW 180 (o↔i) ≤ 4 m	E 120 (o↔i)/ EI 120 (o↔i)/ EW 120 (o↔i) ≤ 7,5 m E 180 (o↔i)/ EI 180 (o↔i)/ EW 180 (o↔i) ≤ 6 m E 240 (o↔i)/ EI 240 (o↔i)/ EW 240 (o↔i) ≤ 4 m

*Maintaining the specified fire resistance performance requires the use of a fire protection tape.
According to fire resistance classification FIRES-CR-278-25-AURE, the specified parameters also apply to ARPANEL S MiWo and ARPANEL S MiWo MXL sandwich panels.

COPYRIGHT © 2026, ADAMIETZ S.A.

PRODUCT DATA SHEET

ARPANEL S MiWo Lt

PROFILES

Name	external	internal	cross-section
Micro 8	✓	✗	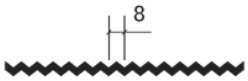
Micro 14	✓	✗	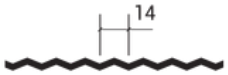
Linear	✓	✓	
Smooth	✓	✓	
Micro 20	✗	✓	
Micro 30	✓	✗	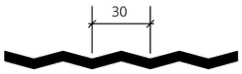

TYPES OF STANDARD COATINGS

Polyester – PE
*Other types of coatings, e.g. PVDF, PUR PA, HDX, PRISMA, FOODSAFE, HPS, SDP, are available upon request.

ENVIRONMENT IN CASE OF A STANDARD COATING, POLYESTER – PE

A possibility to apply inside, in environments A1, A2, A3 and outside buildings C1, C2, C3.
*For environments characterized by higher aggressiveness, a coating that meets the requirements of a given corrosivity category should be selected.

COPYRIGHT © 2026, ADAMIETZ S.A.

ARPANEL S MiWo Lt

STANDARD COLORS



AVAILABLE LENGTHS OF PANELS

Standard lengths of panels are from 2,0 m to 14,5 m.

PERMISSIBLE DEVIATIONS FROM DIMENSIONS

According to EN 14509:
Panels with length of ≤ 3 m ±5 mm
Panels with length of > 3 m ±10 mm
For the covering width of the sandwich panel, ±2 mm
At the panel thickness:
For D ≤ 100 mm ±2 mm
For D > 100 mm ±2 %
Rectangularity of cut at the length ≤ 0,6 % of the panel width
Panel:
2 mm per each meter of length, but not more than 20 mm
8,5 mm per each meter of width, but not more than 10 mm

This product data sheet, including the descriptions, technical data, specifications and drawings, is for information purposes only and constitutes marketing material.
The product data sheet does not constitute an offer within the meaning of the Civil Code.
The manufacturer reserves the right to change the technical specifications, design, configuration, appearance and functionality of its products, as well as to introduce new products and withdraw products from the product data sheet, without being required to update the published material in advance.
The presented information does not constitute a basis for determining the final specifications and properties of the products. The binding technical specifications, terms of performance, scope of delivery and warranty terms are set out in the individual contract (order).
In the event of discrepancies between the information contained in this product data sheet and the contract (order), the terms of the contract (order) shall be binding.
All copyright to this product data sheet and its individual elements is held by Adamietz S.A., the manufacturer of ARPANEL sandwich panels. Copying, reproducing, publishing, licensing, using for commercial purposes or marketing all or part of this publication without the prior written consent of Adamietz S.A. is prohibited, subject to cases permitted by the applicable law.
Any infringement of the rights relating to these materials may result in Adamietz S.A. pursuing claims as provided for by law, including claims arising from copyright infringement and acts of unfair competition.